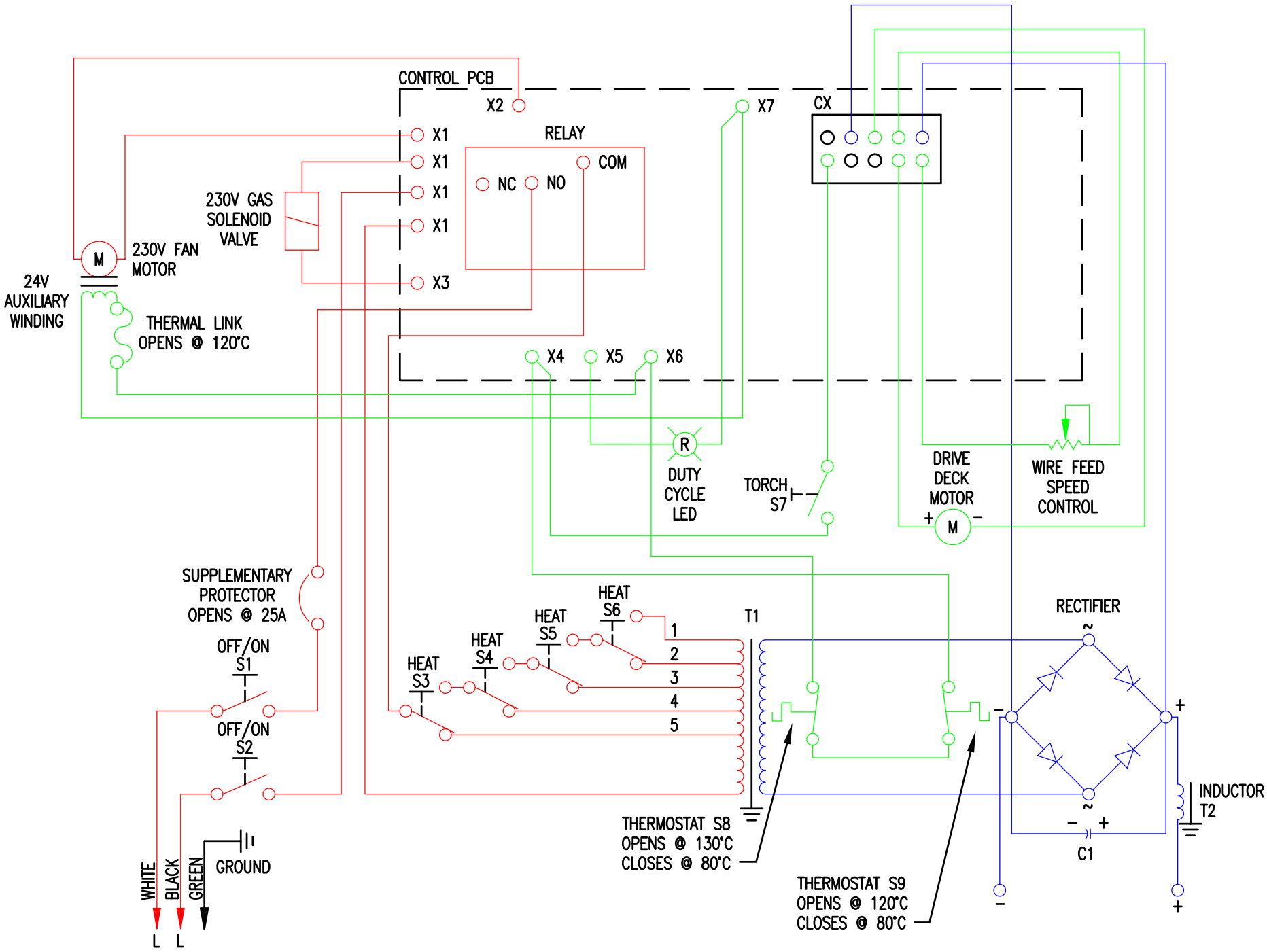
CONTROL PCB
X2
X1
X1
X1
X1
X3
X4
X5
X6
X7
RELAY
COM
NC
NO
CX
230V GAS
SOLENOID
VALVE
M
230V FAN
MOTOR
24V
AUXILIARY
WINDING
THERMAL LINK
OPENS @ 120°C
R
DUTY
CYCLE
LED
TORCH
S7
DRIVE
DECK
MOTOR
M
WIRE FEED
SPEED
CONTROL
SUPPLEMENTARY
PROTECTOR
OPENS @ 25A
OFF/ON
S1
OFF/ON
S2
HEAT
S3
HEAT
S4
HEAT
S5
HEAT
S6
T1
1
2
3
4
5
RECTIFIER
INDUCTOR
T2
C1
THERMOSTAT S8
OPENS @ 130°C
CLOSES @ 80°C
THERMOSTAT S9
OPENS @ 120°C
CLOSES @ 80°C
WHITE
BLACK
GREEN
GROUND
L
L