Tank Mounted Compressor Exploded View for Cast Iron 2¾" Series

Models VT610204, VT910204, VT617000, VT618300, VT610604, VT618800, VT618900 & VT610304

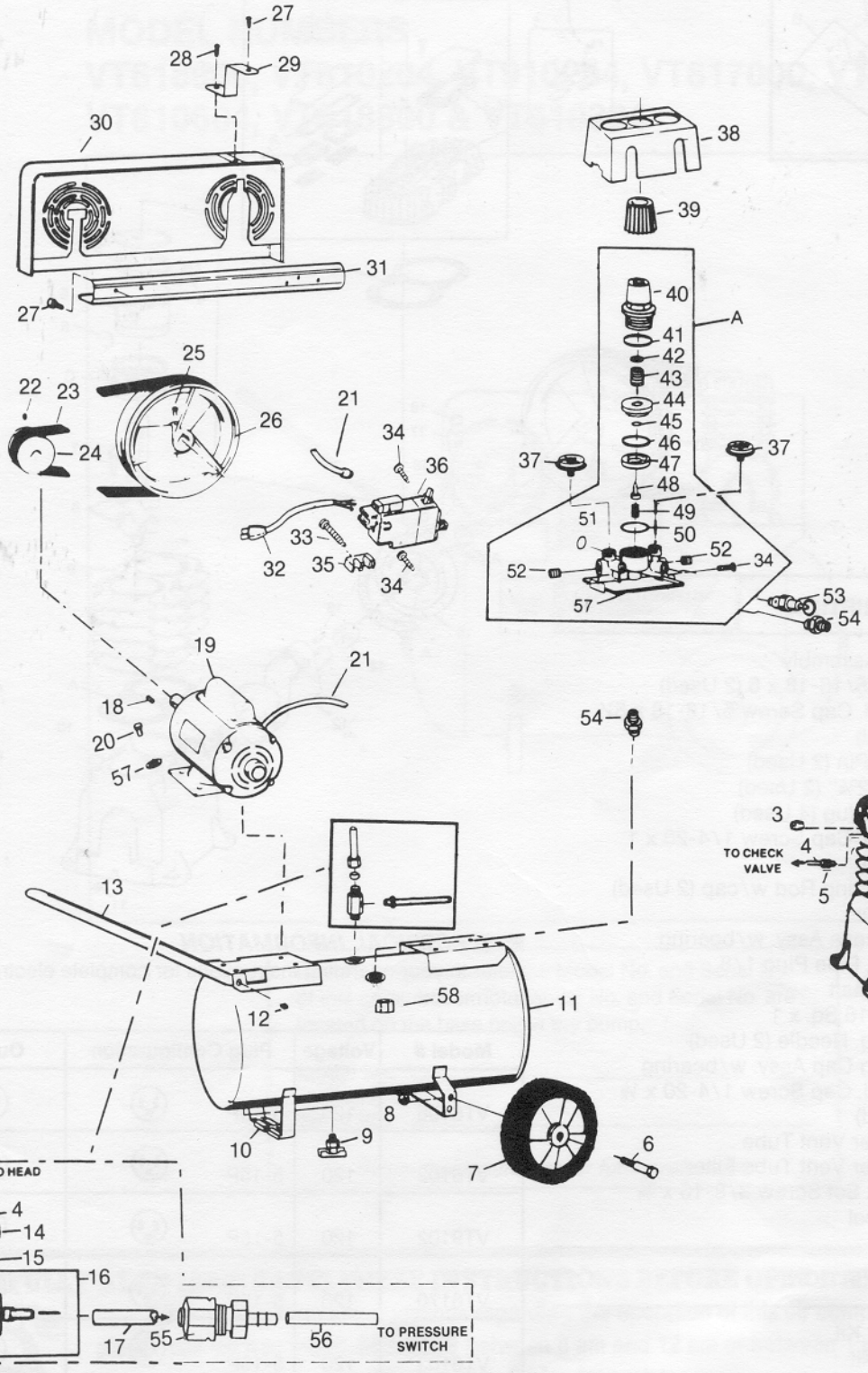

NOTE:

If the power cord should be replaced, it is important to use a screw driver to push down on springs in the slots to release white "neutral" wire and black "hot" wire as shown.

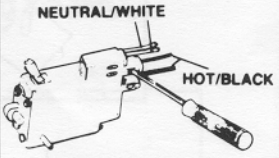

The ground wire should be connected with a screw to the manifold post. (Labeled with the grounding symbol ⏚)

To connect the white "Neutral" wire and black "Hot" wire use a screw driver to push down the springs. White wires should be connected to terminals L2 (power cord) and T2 (motor cord). Black wires should be connected to terminals L1 (power cord) and T1 (motor cord) as shown.

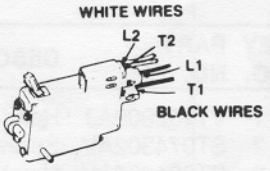

Parts List for Cast Iron 2¾" Series

Models VT610204, VT610304, VT610604, VT617000, VT618300, VT618800, VT618900 & VT910204

KEY NO.	DESCRIPTION	PART NO. FOR MODELS:					QTY.
		VT610204 VT610304 VT910204	VT617000 — —	VT618300 VT618800 —	— — VT610604	— VT618900 —	
1	Compressor Pump w/o Flywheel	VT232604KB	VT232604KB	VT232604KB	VT232604KB	VT232604KB	1
2	Screw 5/16-18 x ¾	ST016500AV	ST016500AV	ST016500AV	ST016500AV	ST016500AV	4
3	Plug	ST022400AV	ST022400AV	ST022400AV	ST022400AV	ST022400AV	1
4	Exhaust Tube	VT023700AP	VT023700AP	VT023700AP	VT023700AP	VT023700AP	1
5	Compression Connector	ST018300AV	ST018300AV	ST018300AV	ST018300AV	ST018300AV	1
6	Axle Bolt	ST033400AV	ST033400AV	ST033400AV	ST033400AV	ST033400AV	2
7	Wheel	WA002500AV	WA002500AV	WA002500AV	WA002500AV	WA002500AV	2
8	Hex Nuts	ST033500AV	ST033500AV	ST033500AV	ST033500AV	ST033500AV	2
9	Drain Petcock	D-1401	D-1401	D-1401	D-1401	D-1401	1
10	Foot	ST041600AV	ST041600AV	ST041600AV	ST041600AV	ST041600AV	2
11	Air Receiver	AR017600JY	AR017600JY	AR017600JY	—	—	1
		AR017400JY	—	AR017400JY	—	AR017400JY	1
		AR017700JY	—	—	AR017700JY	—	1
12	Sq. Hd. Set Screws ¼-20 x ½	ST012200AV	ST012200AV	ST012200AV	ST012200AV	ST012200AV	1
13	Handle	HL001800BH	HL001800BH	HL001800BH	HL001800BH	HL001800BH	1
14	Compression Nut	ST033001AV	ST033001AV	ST033001AV	ST033001AV	ST033001AV	1
15	Compression Sleeve	ST067300AV	ST067300AV	ST067300AV	ST067300AV	ST067300AV	1
16	Check Valve	CV220301AJ	CV220301AJ	CV220301AJ	CV220301AJ	CV220301AJ	1
17	Flex Tube	ST125001AV	ST125001AV	ST125001AV	ST125001AV	ST125001AV	1
18	Key	KE000900AV	KE000900AV	KE000900AV	KE000900AV	KE000900AV	1
19	Motor	MC035601AV	MC035601AV	MC035601AV	MC013200AV	MC005600AV	1
20	Screw, Hex Hd., 5/16-12 x ½	ST016000AV	ST016000AV	ST016000AV	ST016000AV	ST016000AV	4
21	Motor Cord	EC011302AV	EC011302AV	EC011302AV	EC011302AV	EC011302AV	1
22	Sq. Hd. Set Screw ¼-20 x ½	ST012200AV	ST012200AV	ST012200AV	ST012200AV	ST012200AV	1
23	Belt, Poly V "J" 48 in.	BT005400AV	BT005400AV	BT005400AV	BT005400AV	BT005400AV	1
24	Motor Pulley	PU000100AG	PU000100AG	PU005800AG	PU005800AG	PU000100AG	1
25	Set Screw ⅜-16 x ¾	ST026200AV	ST026200AV	ST026200AV	ST026200AV	ST026200AV	1
26	Flywheel	PU006300AG	PU006300AG	PU006300AG	PU006300AG	PU006300AG	1
27	Self Tapping Screw 10-24 x 5/16	ST042400AV	ST042400AV	ST042400AV	ST042400AV	ST042400AV	6
28	Plascrew	ST058500AV	ST058500AV	ST058500AV	ST058500AV	ST058500AV	1
29	Belt Guard Bracket	BG014014AL	BG014014AL	BG014014AL	BG014014AL	BG014014AL	1
30	Belt Guard	BG020101AV	BG020101AV	BG020101AV	BG020101AV	BG020101AV	1
31	Channel	BG020001AV	BG020001AV	BG020001AV	BG020001AV	BG020001AV	1
32	Motor Cord w/plug 115V	EC002104AV	EC002104AV	EC002104AV	EC002104AV	EC002104AV	1
33	Screw	ST073233AV	ST073233AV	ST073233AV	ST073233AV	ST073233AV	1
34	Screw	ST073224AV	ST073224AV	ST073224AV	ST073224AV	ST073224AV	3
35	Strain Relief	ST081901AV	ST081901AV	ST081901AV	ST081901AV	ST081901AV	1
36	Pressure Switch	CW208102AV	CW208102AV	CW208102AV	CW208102AV	CW208102AV	1
37	Gauge	GA016101AV	GA016101AV	GA016101AV	GA016101AV	GA016101AV	2
38	Manifold Shroud	RE009401AV	RE009401AV	RE009401AV	RE009401AV	RE009401AV	1
39	Adjusting Knob	RE009700AV	RE009700AV	RE009700AV	RE009700AV	RE009700AV	1
40	Regulator Top Assembly	RE010401AJ	RE010401AJ	RE010401AJ	RE010401AJ	RE010401AJ	1
41	O-Ring	ST070180AV	ST070180AV	ST070180AV	ST070180AV	ST070180AV	1
42	Spring Plate	RE009800AV	RE009800AV	RE009800AV	RE009800AV	RE009800AV	1
43	Spring	ST114500AV	ST114500AV	ST114500AV	ST114500AV	ST114500AV	1
44	Regulator Piston	RE009900AV	RE009900AV	RE009900AV	RE009900AV	RE009900AV	1
45	O-Ring .25	ST070160AV	ST070160AV	ST070160AV	ST070160AV	ST070160AV	1
46	O-Ring 1.187	ST070161AV	ST070161AV	ST070161AV	ST070161AV	ST070161AV	1
47	Valve Seat	RE010000AV	RE010000AV	RE010000AV	RE010000AV	RE010000AV	1
48	Valve Stem	RE010100AV	RE010100AV	RE010100AV	RE010100AV	RE010100AV	1
49	Spring	RE010300AV	RE010300AV	RE010300AV	RE010300AV	RE010300AV	1
50	O-Ring	ST070162AV	ST070162AV	ST070162AV	ST070162AV	ST070162AV	1
51	O-Ring	ST008600AV	ST008600AV	ST008600AV	ST008600AV	ST008600AV	1
52	Plug	ST022500AV	ST022500AV	ST022500AV	ST022500AV	ST022500AV	2
53	Safety Valve	V-203600BL	V-203600BL	V-203600BL	V-203600BL	V-203600BL	1
54	Connector	HF002401AV	HF002401AV	HF002401AV	HF002401AV	HF002401AV	2
55	Compression Union	ST125500AV	ST125500AV	ST125500AV	ST125500AV	ST125500AV	1
56	Flex Tube	ST079704AV	ST079704AV	ST079704AV	ST079704AV	ST079704AV	1
57	5/16"-18 Washer	ST011200AV	ST011200AV	ST011200AV	ST011200AV	ST011200AV	4
58	5/16"-18 Lock Nut	ST146000AV	ST146000AV	ST146000AV	ST146000AV	ST146000AV	4

Replacement Kit:

A Regulator Kit RE003701AJ

Not Illustrated:

Hose 15' HA212601AJ

Air Chuck JB200101AV